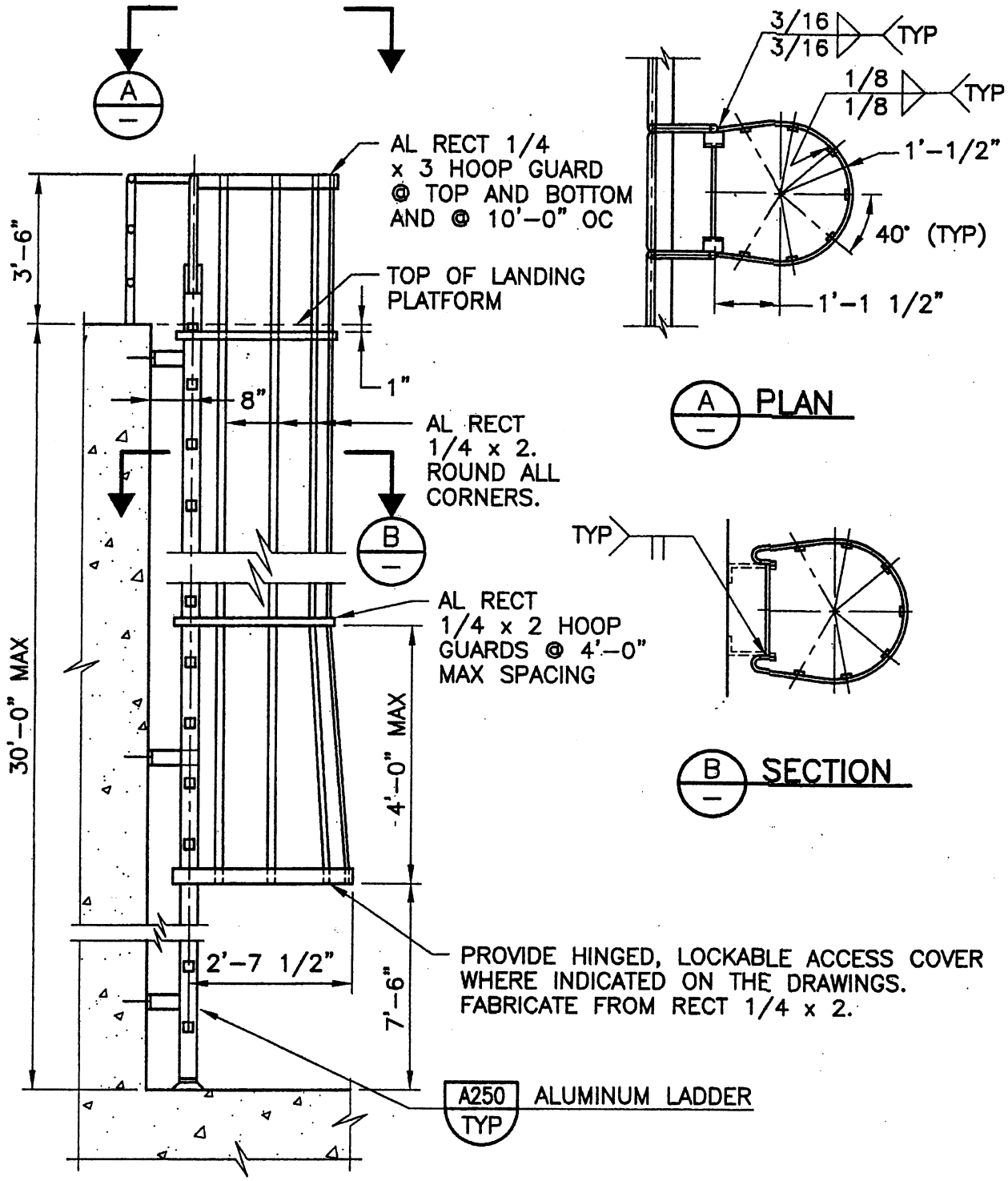

A254 TYP ALUMINUM CAGED LADDER FASTENED TO WALL 08-01-05