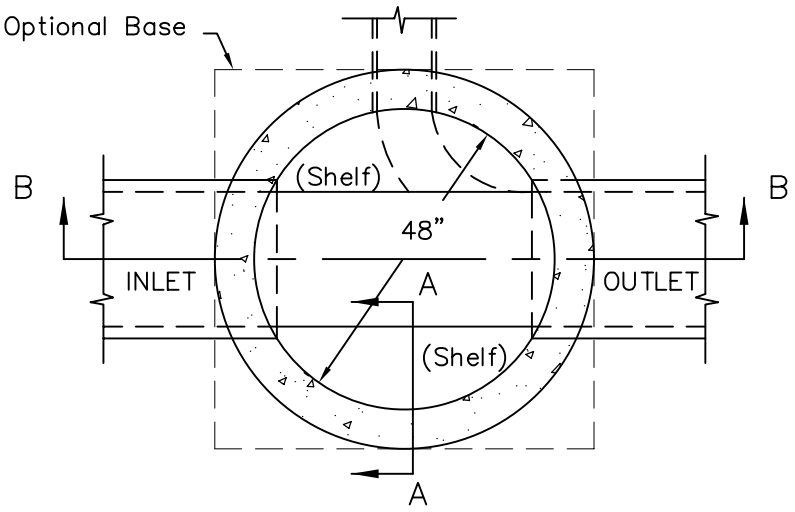

PLAN

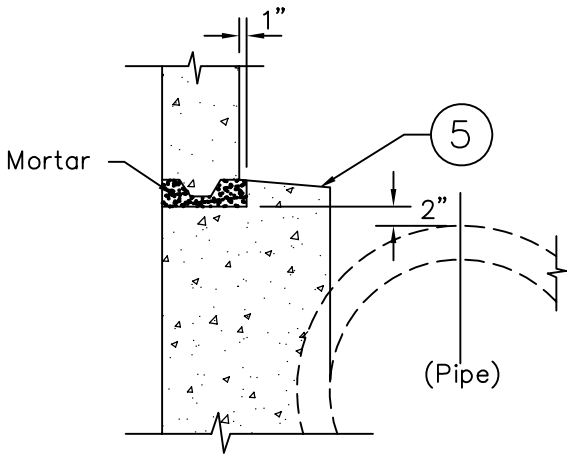

SECTION A–A

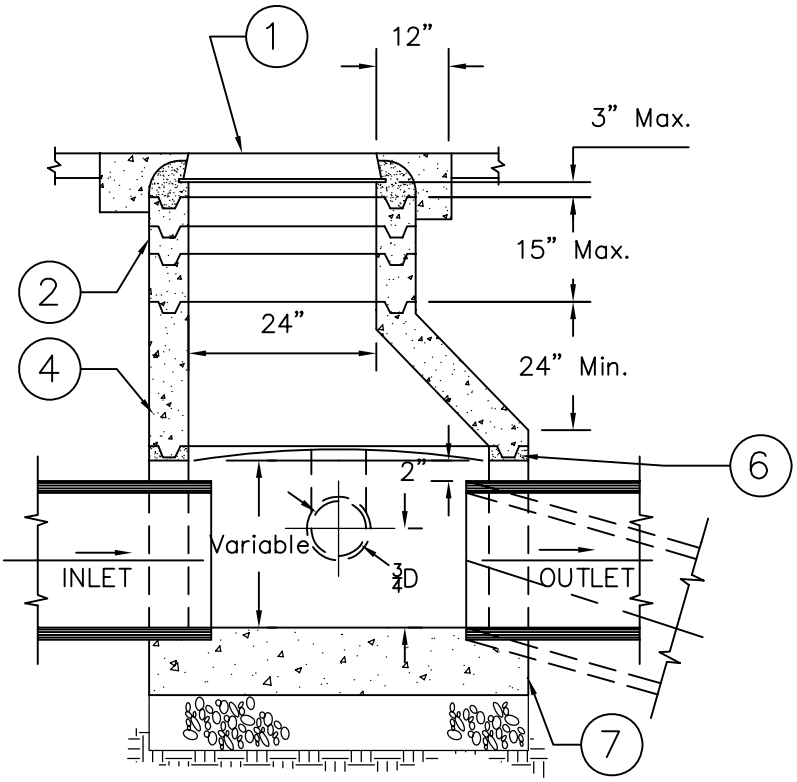

SECTION B–B

NOTES:

1. Manhole frame and cover shall have a 24" clear opening and shall conform to APWA Standard Plan 630–2 or use Model SBF 1495. Cover shall be lettered "SANITARY SEWER". Inside of frame shall be grouted with non–shrink grout. Lid shall be rattle free without use of a sealant.
2. Use only 3" or 6" ajdustment rings. Cone top to frame top shall not exceed 15". Grade adjustment rings and manhole frames shall be sealed at every joint with butyl rubber (Conseal CS–102 or equal) and grouted on the inside.
3. PCC Collar shall conform to Standard Plan 638–AG.
4. Cone shall be eccentric and conform to riser requirements. Straight side of cone shall be positioned over outlet.
5. Manhole risers shall be 48" in diameter and shall conform to ASTM C478 for Precast Reinforced Manhole Sections.
6. Joints to be set in a butyl rubber sealant (Conseal CS–102 or equal). Inside of joints shall be be grouted with non–shrink grout.
7. Manhole base. Refer to Standard Plan 207–AG.

REFERENCE:

200–AG Sewer Manhole
207–AG Manhole Base
630–2 (APWA) 24" Manhole frame and cover
638–AG PCC Collar

CITY OF ARROYO GRANDE - ENGINEERING DEPARTMENT

ISSUE DATE:

APR 1, 2005

SHALLOW SEWER MANHOLE

Don Spagnolo, P.E.
Director of Public Works/City Engineer
L.C.E. No. 42993

STANDARD PLAN

201-AG

Sheet 1 of 1