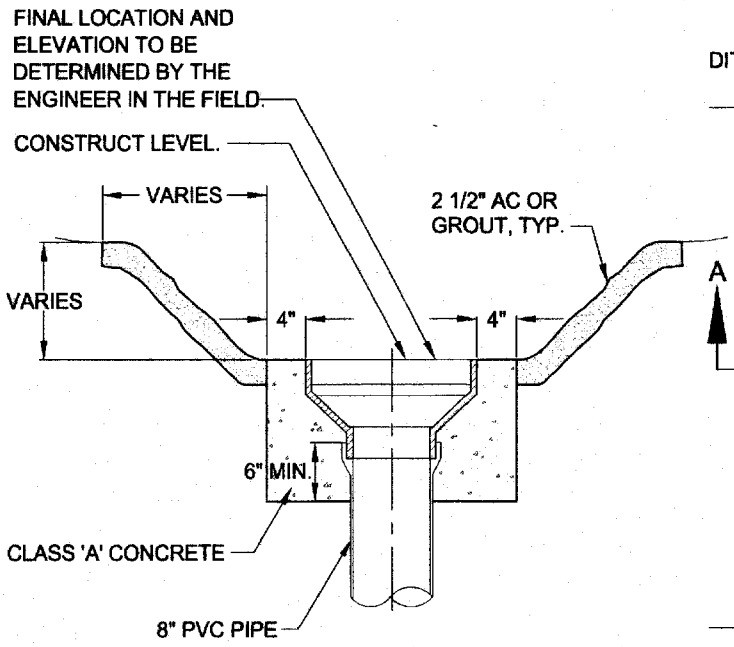

SECTION A-A

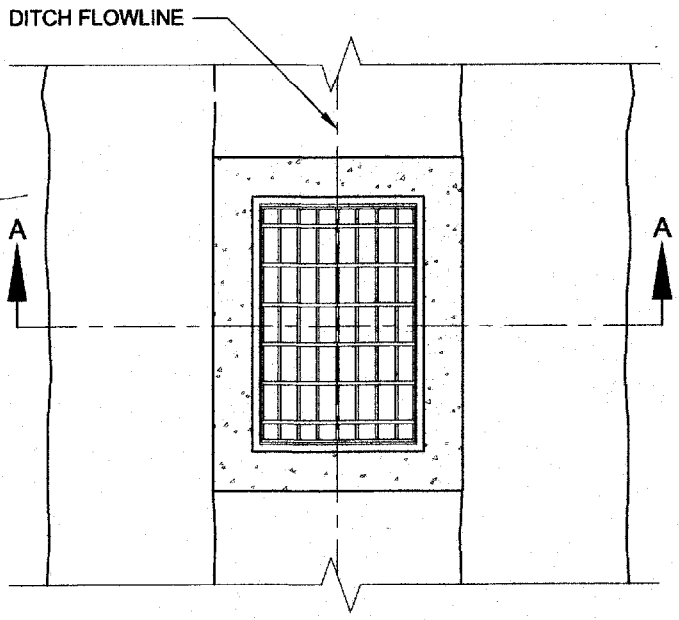

PLAN

GUTTER DRAIN No. 20 DITCH INSTALLATION

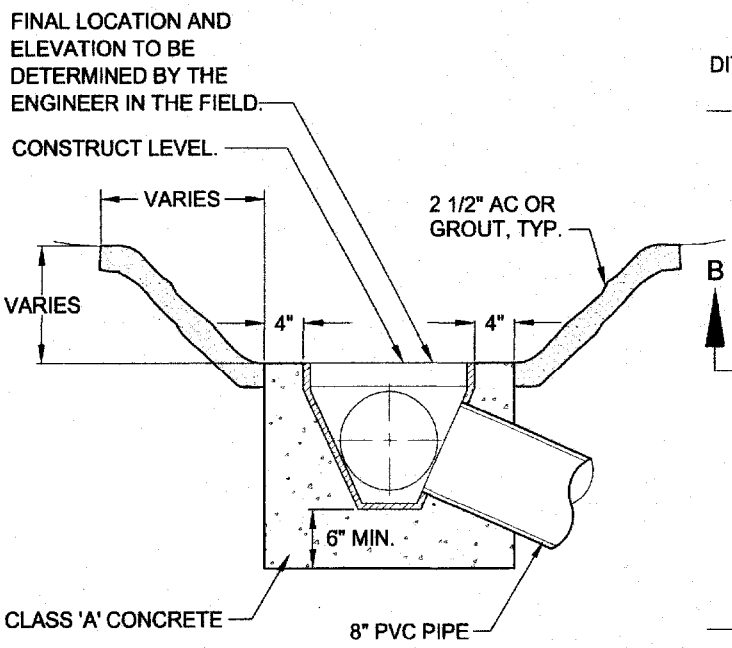

SECTION B-B

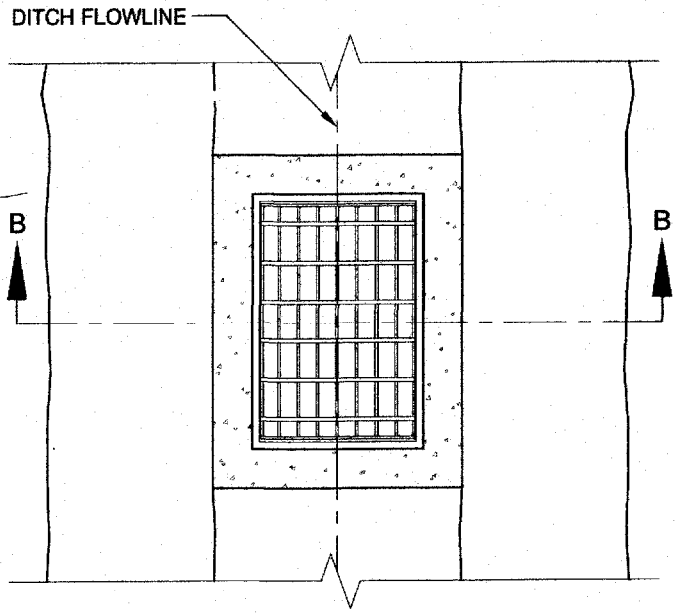

PLAN

GUTTER DRAIN No. 24 DITCH INSTALLATION

NOTE:

NOT TO BE USED WITHOUT DEPARTMENTAL APPROVAL.

REV.	DATE	DESCRIPTION

CITY OF SACRAMENTO DEPARTMENT OF UTILITIES	OPTIONAL GUTTER DITCH INSTALLATION	APPR'D BY: [signature] NO SCALE DATE: MAY 2007 DWG. NO. S - 60

R:\Utilstds\City_Std_Details\Sewer_Drainage\S-60