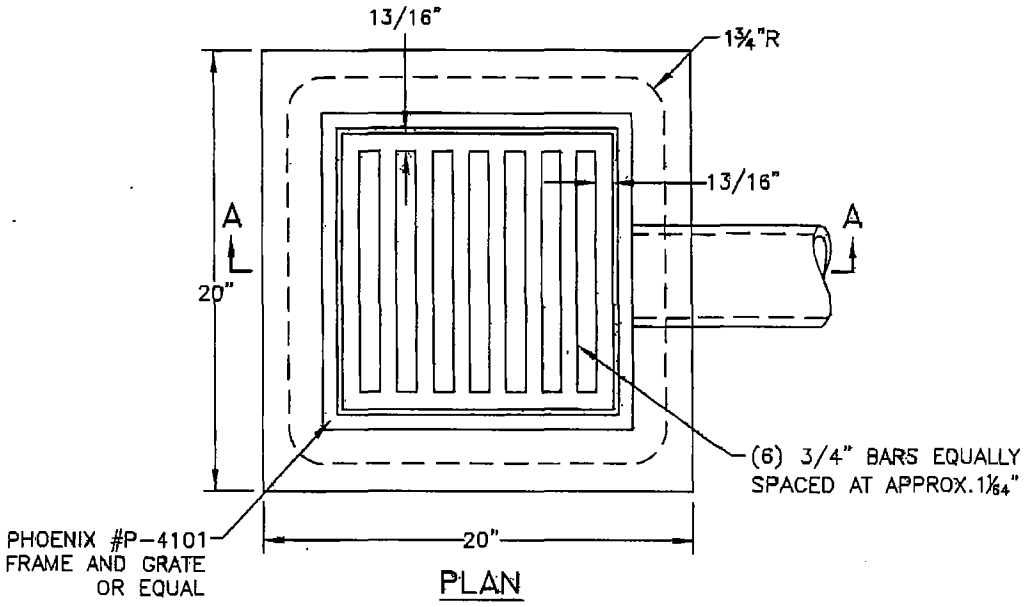

PLAN

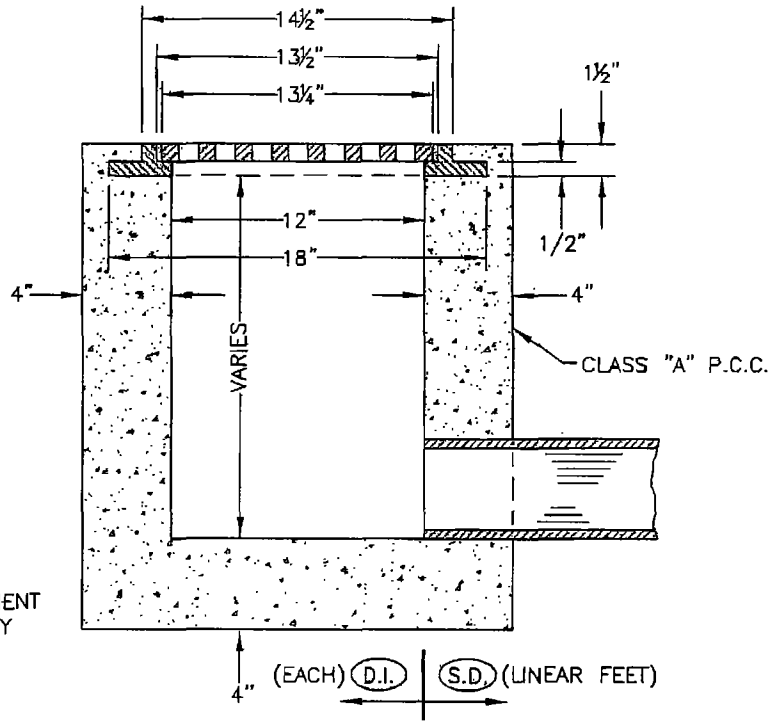

(S.D.) = QUANTITY PAYMENT LIMITS FOR CITY CONTRACTS

SECTION A-A

NOTE:

THIS DROP INLET SHALL BE USED FOR "THROUGH THE CURB" AREA DRAINS AND ALLEY DRAINS ONLY.

REVISION | BY | DATE | APP. BY | COUNTY

CITY OF CHICO **STANDARD PLAN**

DRAWN BY: GL DATE: 1/05
CHECKED BY: MJ SCALE: NONE
APPROVED: DIRECTOR OF ENGINEERING

FLAT GRATE INLET

NO. S-26

SHEET 1 OF 1