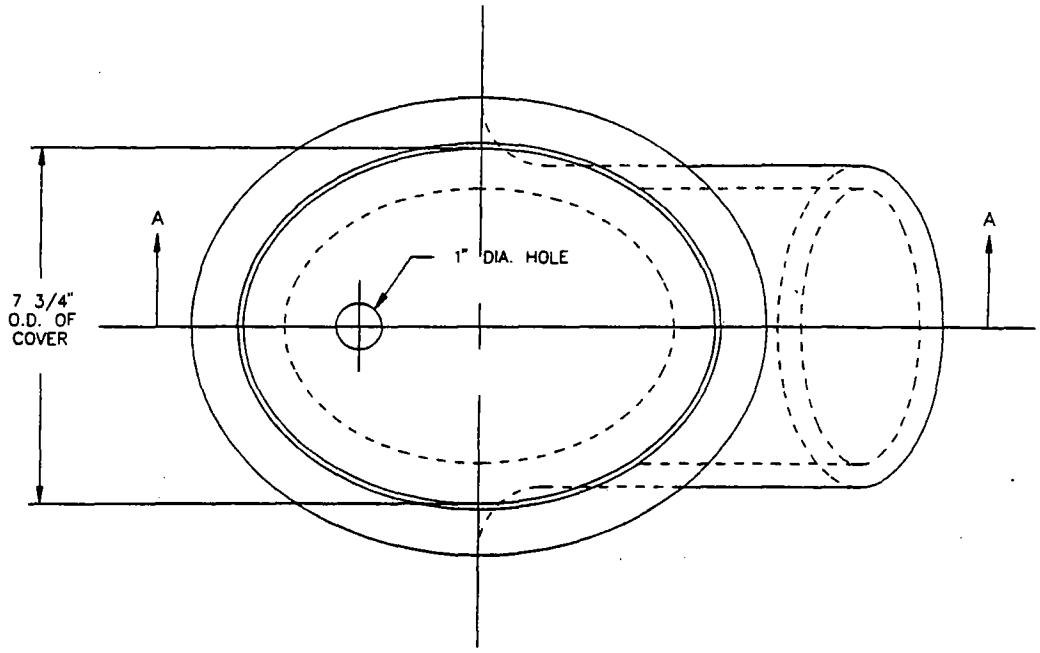

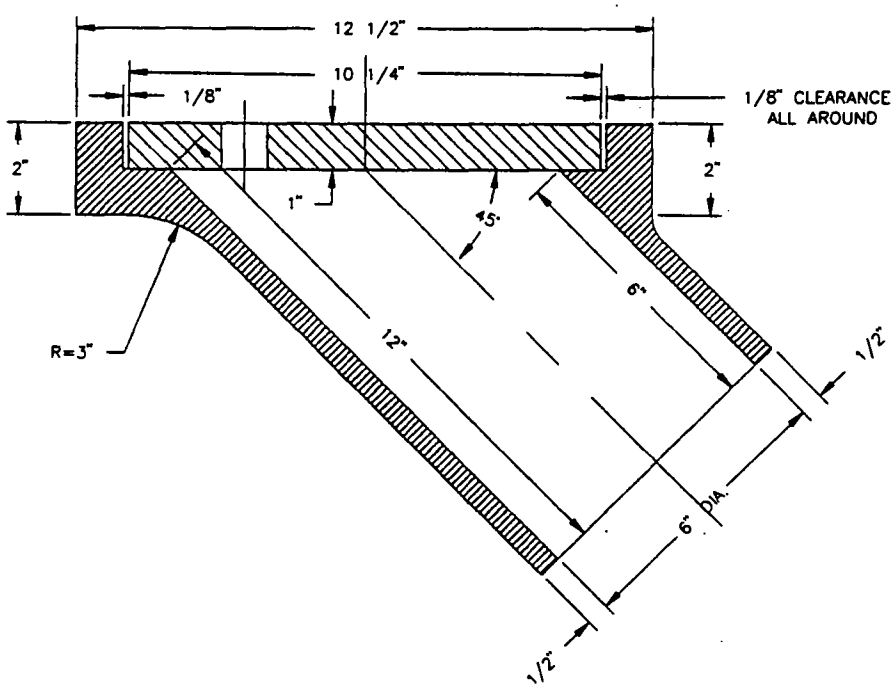

PLOTTED: 04/12/1995

ACAD FILE #23\S-8

Revisions Date	Desc	DATE: 2-24-1995	COUNTY OF KERN STATE OF CALIFORNIA DEVELOPMENT STANDARD	6" C.I. RISER FRAME AND COVER (RODDING AND FLUSHING INLET)	PLATE NO. S-8
		DESIGNED BY:			
		DRAWN BY: RDM			
		CHECKED BY:			