DIST	COUNTY	ROUTE	POST MILES TOTAL PROJECT	SHEET NO.	TOTAL SHEETS

REGISTERED CIVIL ENGINEER

May 1, 2006
PLANS APPROVAL DATE

REGISTERED PROFESSIONAL ENGINEER Glenn DeCou No. C34547 Exp. 9-30-07 CIVIL STATE OF CALIFORNIA

The State of California or its officers or agents shall not be responsible for the accuracy or completeness of electronic copies of this plan sheet.

To get to the Caltrans web site, go to: http://www.dot.ca.gov

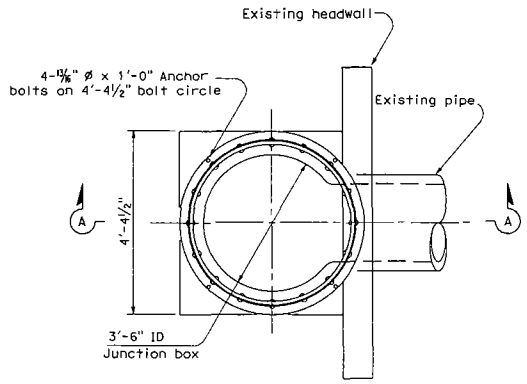

PLAN

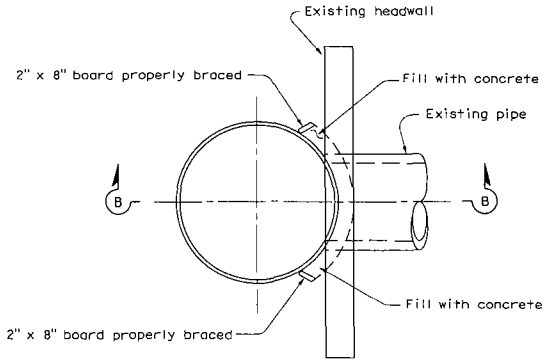

PLAN

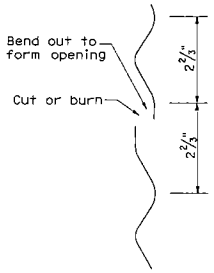

DETAIL A

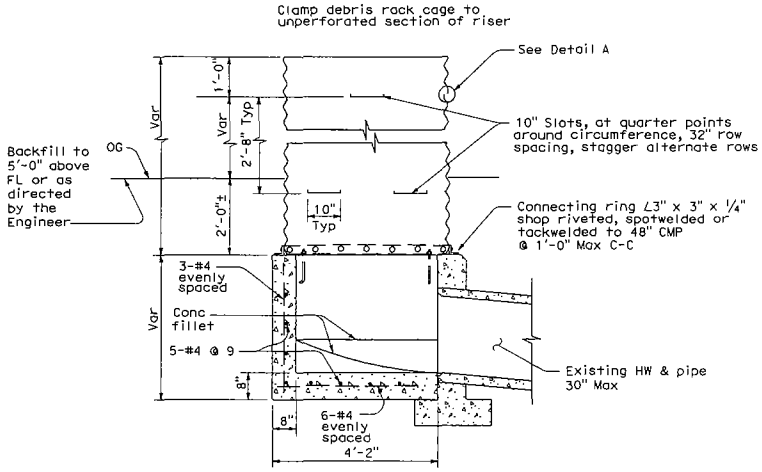

SECTION A-A

CMP RISER
AND JUNCTION BOX

TYPE A

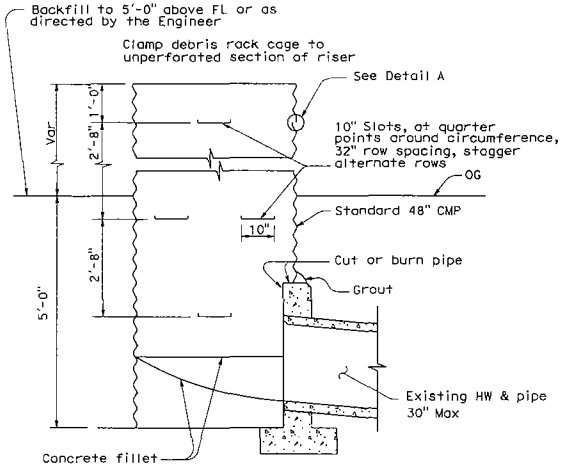

SECTION B-B

CMP RISER

TYPE B

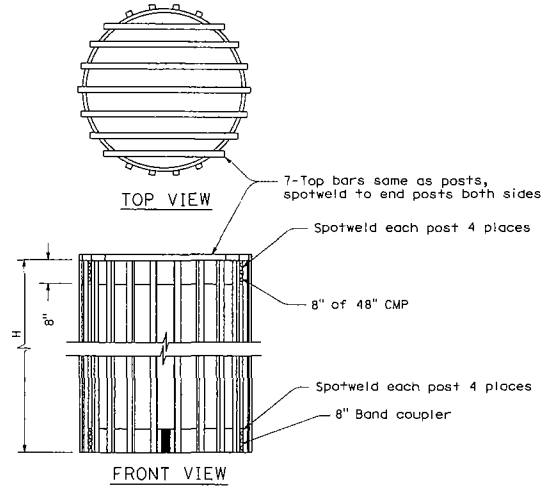

H = 22 Posts- 6'-0" or 8'-0" lengths use 2" pipe or L2" x 2" x 3/16" (Galvanized steel or aluminum)

DEBRIS RACK CAGE

STATE OF CALIFORNIA
DEPARTMENT OF TRANSPORTATION

PIPE RISER WITH DEBRIS RACK CAGE

NO SCALE

D93C

2006 STANDARD PLAN D93C

8-3-04