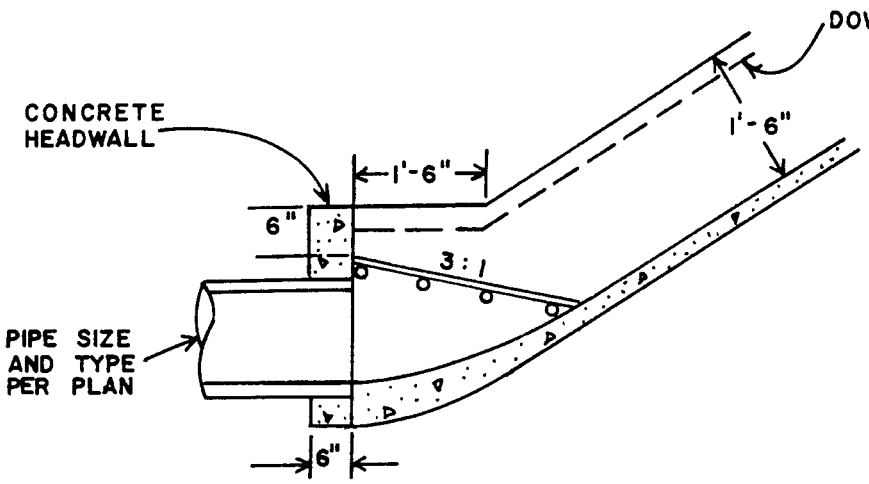

SECTION A-A

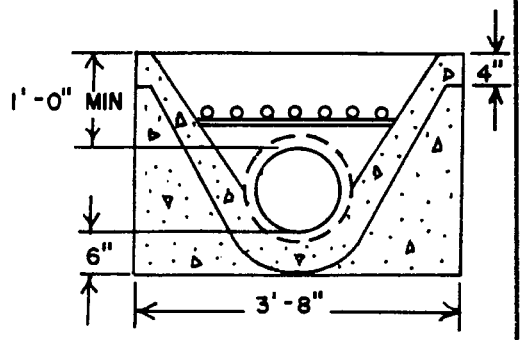

SECTION B-B

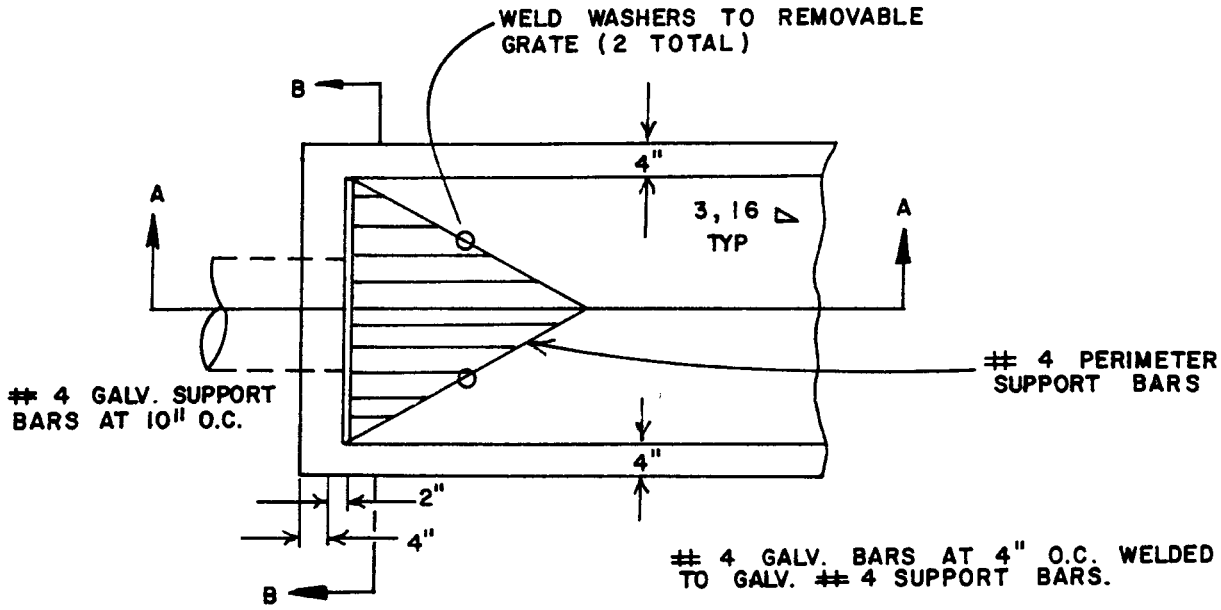

PLAN VIEW

NOTES

1. GROUND SHALL BE PRE-WETTED PER SOILS ENGINEER DIRECTIONS PRIOR TO PLACEMENT OF CONCRETE.
2. GRATE SHALL BE BOLTED TO 1/2" X 4 1/2" GALV. ANCHOR BOLTS SET IN CONCRETE.
3. MATERIAL FOR CONSTRUCTION OF DOWNDRAIN SHALL BE CONCRETE REINFORCED WITH 6" X 6" WI. 4 X WI. 4 WELDED WIRE FABRIC.
4. DOWNDRAIN TO PIPE TRANSITION SHALL BE SET 2' MIN. FROM ROAD RIGHT-OF-WAY.
5. GRATE SHALL BE HOT DIP GALVANIZED AFTER FABRICATION.

Revised	Drawn J.A. POTTS Date 9/21/90	CITY OF CORONA PUBLIC WORKS DEPARTMENT
9/90	Approved Date 12-12-90	
	Joseph R. Palencia Director of Public Works	DOWNDRAIN TO PIPE TRANSITION
		STD. PLAN 220-2.3