DIST	COUNTY	ROUTE	POST MILES TOTAL PROJECT	SHEET NO.	TOTAL SHEETS

REGISTERED CIVIL ENGINEER

May 1, 2006
PLANS APPROVAL DATE

REGISTERED PROFESSIONAL ENGINEER C.J. Sims No. C46471 Exp. 6-30-07 CIVIL STATE OF CALIFORNIA

The State of California or its officers or agents shall not be responsible for the accuracy or completeness of electronic copies of this plan sheet.

To get to the Caltrans web site, go to: http://www.dot.ca.gov

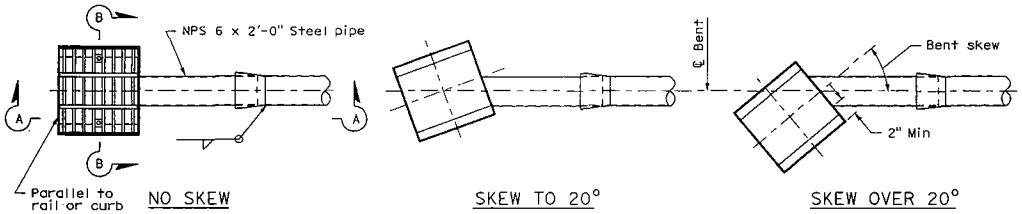

PLAN-DECK DRAIN ASSEMBLY

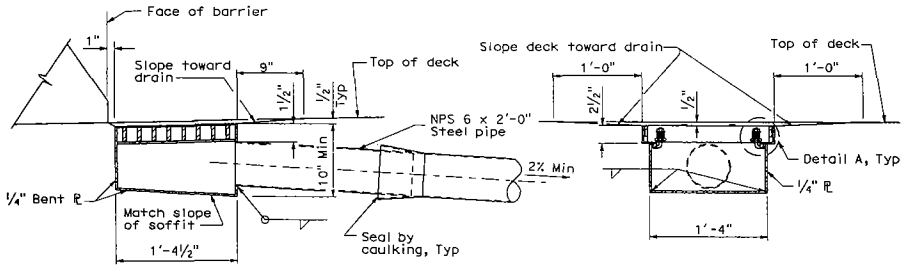

SECTION A-A SECTION B-B

DECK DRAIN ASSEMBLY DETAIL

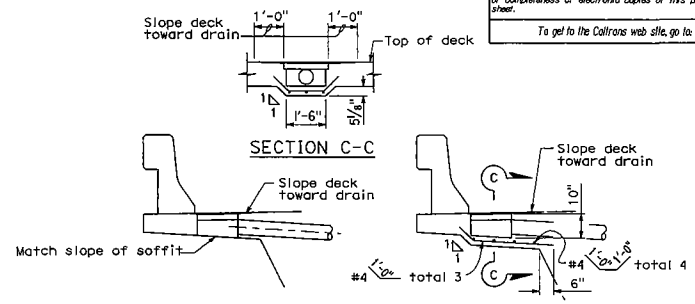

DETAIL 7-9 DRAIN FLUSH WITH OVERHANG

DETAIL 7-10 DRAIN WITH HAUNCHED OVERHANG

ELEVATION-DECK DRAIN LOCATIONS

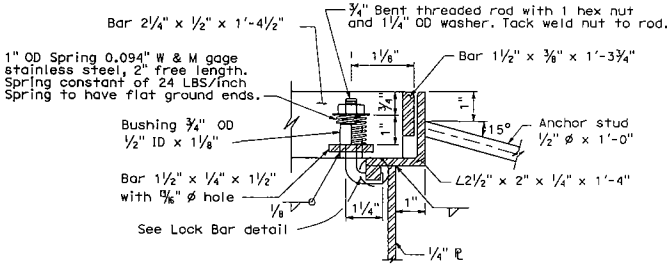

DETAIL A

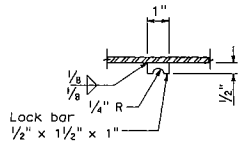

LOCK BAR

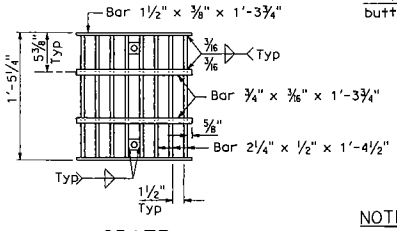

GRATE

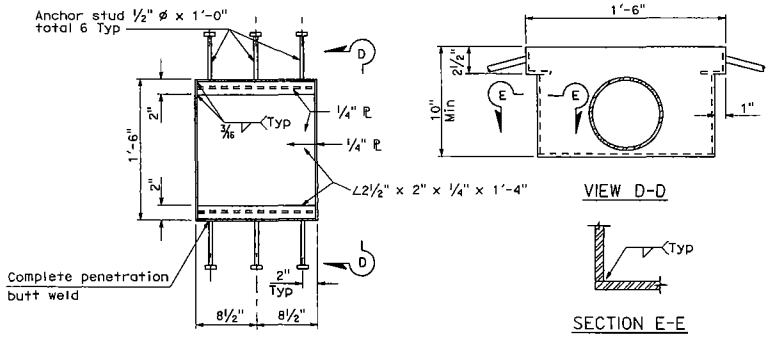

FRAME

NOTES:

1. For drain pipe alignment, sleeve connection, drain outlet details and notes, see Standard Plan B7-6.
2. Galvanize deck drain assembly after fabrication.

STATE OF CALIFORNIA
DEPARTMENT OF TRANSPORTATION

DECK DRAIN TYPE D-3

NO SCALE

B7-7

2006 STANDARD PLAN B7-7

10-17-05