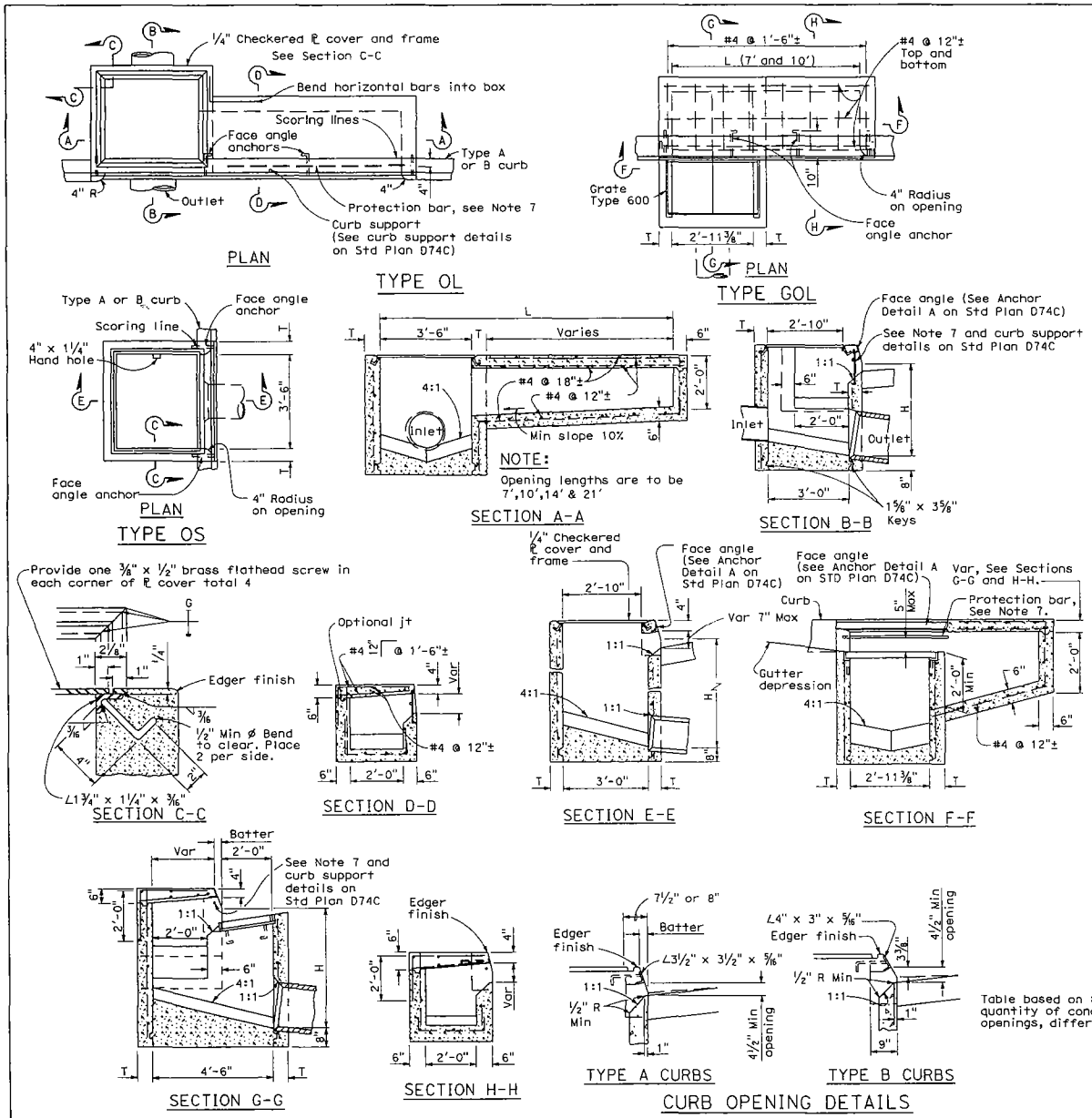

DIST	COUNTY	ROUTE	POST MILES TOTAL PROJECT	SHEET NO.	TOTAL SHEETS

REGISTERED CIVIL ENGINEER

May 1, 2006
PLANS APPROVAL DATE

Glenn DeCou
No. C34547
Exp. 9-30-07
CIVIL
STATE OF CALIFORNIA
REGISTERED PROFESSIONAL ENGINEER

The State of California or its officers or agents shall not be responsible for the accuracy or completeness of electronic copies of this plan sheet.

To get to the Caltrans web site, go to: http://www.dot.ca.gov

NOTES:

1. "H" is the difference in elevation between the outlet pipe flow line and the normal gutter grade line undepressed at the curb face.
2. For "T" wall thickness, see Table A below.
3. Height of curb opening will vary with the type of curb and the depth of the local depression.
4. Wall reinforcing not required when "H" is 8'-0" or less and the unsupported width or length is 7'-0" or less. Walls exceeding these limits shall be reinforced with #4 bars @ 18" ± centers placed 1 1/2" clear to inside of box unless otherwise shown.
5. Inlet bottom reinforcing not required. See Standard Plan D74C for alternative reinforced bottom.
6. Steps-None required where "H" is less than 30". Where "H" is 30" or more, install steps with lowest rung 1'-0" above the floor and highest rung not more than 6" below top of inlet. The distance between steps shall not exceed 1'-0" and be uniform throughout the length of the wall. Place steps in the wall without an opening. Step inserts may be substituted for the bar steps. Step inserts shall comply with State Industrial Safety requirements. See Standard Plan D74C for step details.
7. When shown on the project plans, place a 3/4" plain round protection bar horizontally across the length of the opening and bend back 4" into the inlet wall on each side.
8. Pipe(s) can be placed in any wall.
9. Curb section shall match adjacent curb.
10. Except for inlets used as junction boxes, basin floor shall have a minimum slope of 4:1 from all directions toward outlet pipe and shall have a wood trowel finish.
11. Galvanizing-See Standard Specifications or Special Provisions.
12. See Standard Plans D77A and D77B for grate and frame details and weights of miscellaneous iron and steel.
13. See Standard Plan D78A for gutter depression details.
14. Full penetration butt welds may be substituted for the fillet welds on all anchors.
15. Standard square, hexagon, round or equivalent headed anchors may be substituted for the right angle hooks on the anchors shown on this plan.
16. Cast-in-place or precast alternative is optional with contractor. See Standard Specifications.
17. Cast-in-place inlets to be formed around all pipes/stubs intersecting the inlet, and concrete poured in one continuous operation. Precast inlets shall have mortared connections conforming to details for Type GCP Inlet shown on Standard Plan D75B. See Standard Specifications for mortar composition.

TABLE A

CONCRETE QUANTITIES				
Type	H=3'-0" to 8'-0" (T=6")		H=8'-1" to 20'-0" (T=8")	
	H=3'-0" (CY)	Additional PCC per foot (CY)	H=8'-1" (CY)	Additional PCC per foot (CY)
OS	1.41	0.278	3.81	0.387
OL-7	1.92	0.278	4.29	0.387
OL-10	2.39	0.278	4.77	0.387
OL-14	3.06	0.278	5.45	0.387
OL-21	4.42 *	0.278	6.78	0.387
GOL-7	2.33	0.313	4.96	0.434
GOL-10	2.84	0.313	5.47	0.434

* Based on H=3.1'

Table based on 8" floor slab, no deduction for pipe openings, 7" curb oenings, and curb type giving highest quantity of concrete. No deductions or adjustments are to be made to these quantities because of pipe openings, different floor alternatives, different curb types or different height of curb openings.

STATE OF CALIFORNIA
DEPARTMENT OF TRANSPORTATION

DRAINAGE INLETS

NO SCALE

D72

2006 STANDARD PLAN D72

1-17-06