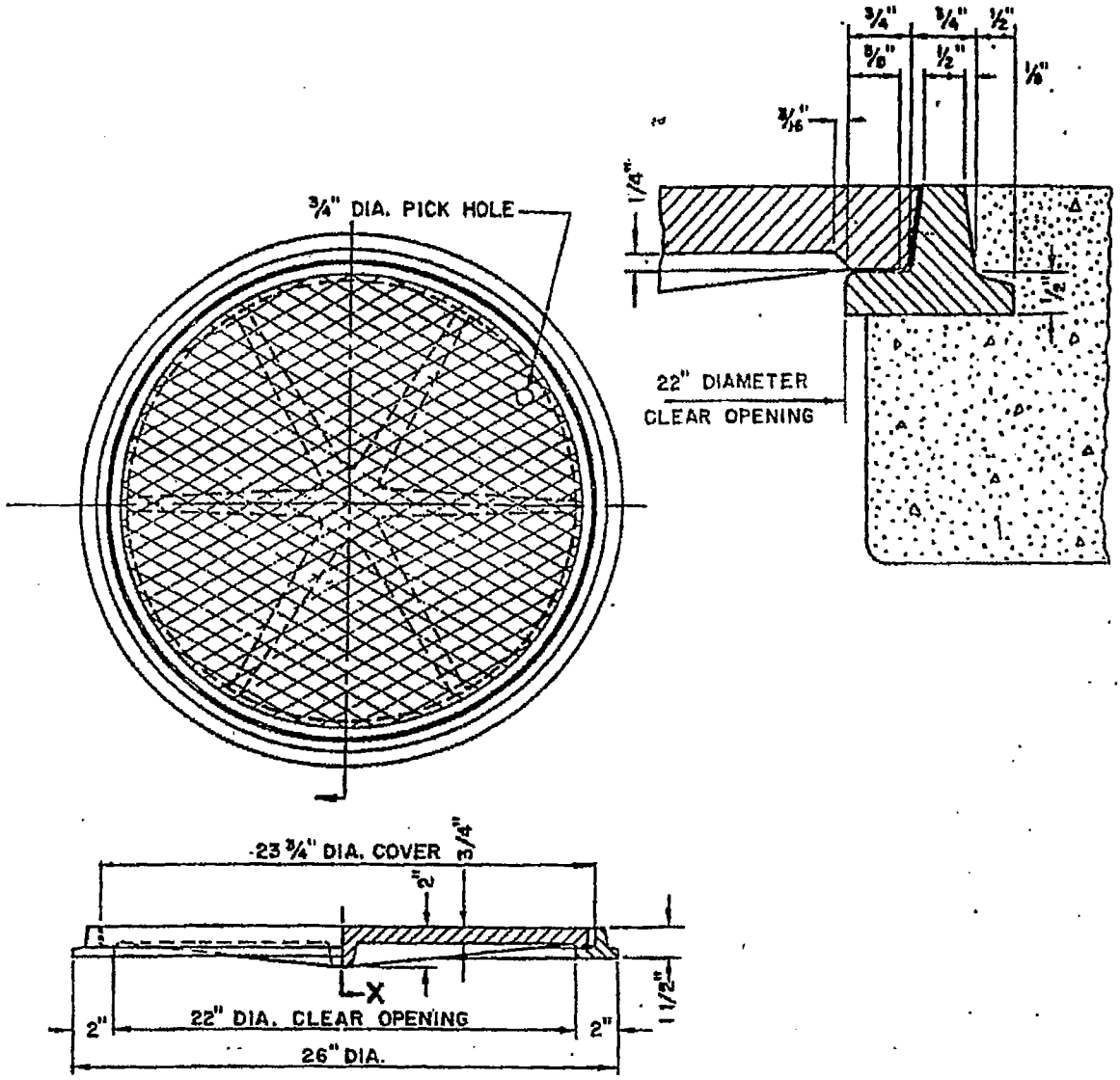

MATERIAL: CAST IRON (ASPHALT COATED OR GALVANIZED)

NOTES

1. SEATS OF FRAME AND COVER SHALL BE MACHINED TO PREVENT NOISE.
2. TOTAL WEIGHT OF FRAME AND COVER APPROX. 130 LBS.
3. MINIMUM CLEAR OPENING 22" DIAMETER. ALL OTHER DIMENSIONS ARE NOMINAL.

ALHAMBRA A-1530 OR EQUIVALENT

CITY OF ADELANTO		MANHOLE FRAME & COVER-PARKWAY	204
DATE: F.V.C. 7-65 L.J.F. 7-74 S.C.D. 9/84	RICHARD S. TITERA CITY ENGINEER		