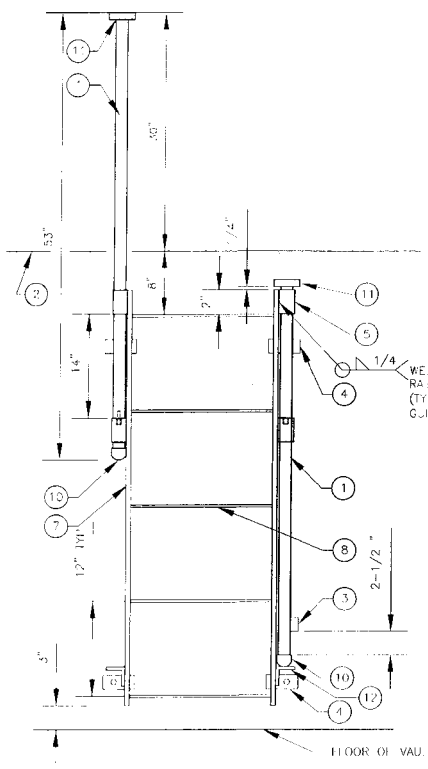

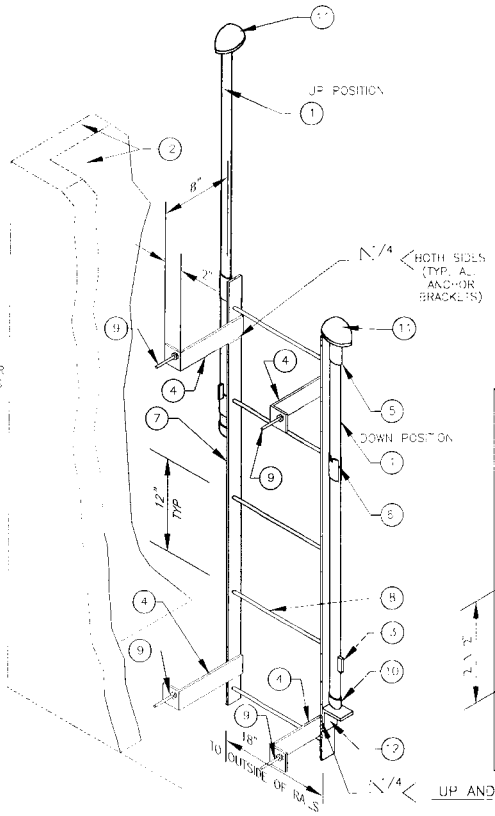

ITEM	MATERIALS
1	1-1/2" DIA. STD. STEEL PIPE AS A SIDE RAIL EXTENSION.
2	VAULT WALL
3	1/4" PLATE 2" HIGH X 1" WIDE WELD TO SIDE RAIL EXTENSION.
4	1/4" PLATE WALL ANCHOR BRACKET, 2" WIDE X 8" LONG.
5	2" LONG, 2" DIA. STD. STEEL PIPE SECTION. WELD TO SIDE OF LADDER AS A GUIDE COUPLING.
6	NOTCH TOP OF PIPE GUIDE 1/2" DEEP X 1/2" WIDE (AS SHOWN BELOW) AND SLOT SIDE TO ACCOMMODATE 1/4" LOCKING TAB.
7	1/4" PLATE STEEL, FLAT BARSTOCK, 2" WIDE.
8	1" DIA. ROUND STEEL BAR, AS A LADDER RUNG.
9	5/16" STAINLESS STEEL ANCHOR BOLT.
10	1-1/2" DIA. PIPE CAP. WELD TO BOTTOM OF SIDE RAIL EXTENSION.
11	2-1/2" DIA X 1/4" THICK PLATE WELDED TO TOP OF SIDE RAIL EXTENSION TEARDROP SHAPE. TAP ON SAME SIDE AS TAB.
12	PLATE BRACKET, 2" X 2" X 1/4" ANGLE, 2" WIDE. WELD TO SIDE OF LADDER AS EXTENSION PIPE STOP.

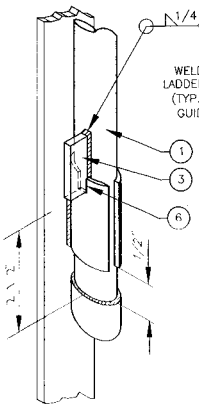

UP AND LOCKED POSITION

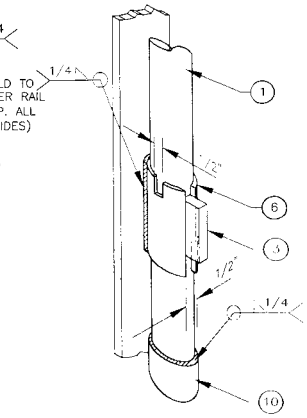

ROTATE TO RAISE AND LOWER

GENERAL NOTES:

1. ALL SURFACES AND WELDS SHALL BE GROUND SMOOTH AND CLEANED AFTER FABRICATION.
2. ALL JOINTS SHALL BE WELDED PER AMERICAN WELDING SOCIETY STANDARDS, LATEST REVISION.
3. HOT DIP GALVANIZE AFTER FABRICATION.
4. ALL CONNECTING AND MOUNTING HARDWARE SHALL BE TYPE 316 STAINLESS STEEL.

VAULT LADDER

REVISION NO.	DATE	APPROVED	DATE

STANDARD SPECIFICATIONS COMMITTEE
J STANEART — CHAIR — 8/31/04 DATE

ENGINEERING DEPARTMENT
DIRECTOR OF ENGINEERING — 8/31/04 DATE

IRWD STD.DWG. G-4

SHEET 1 OF 1