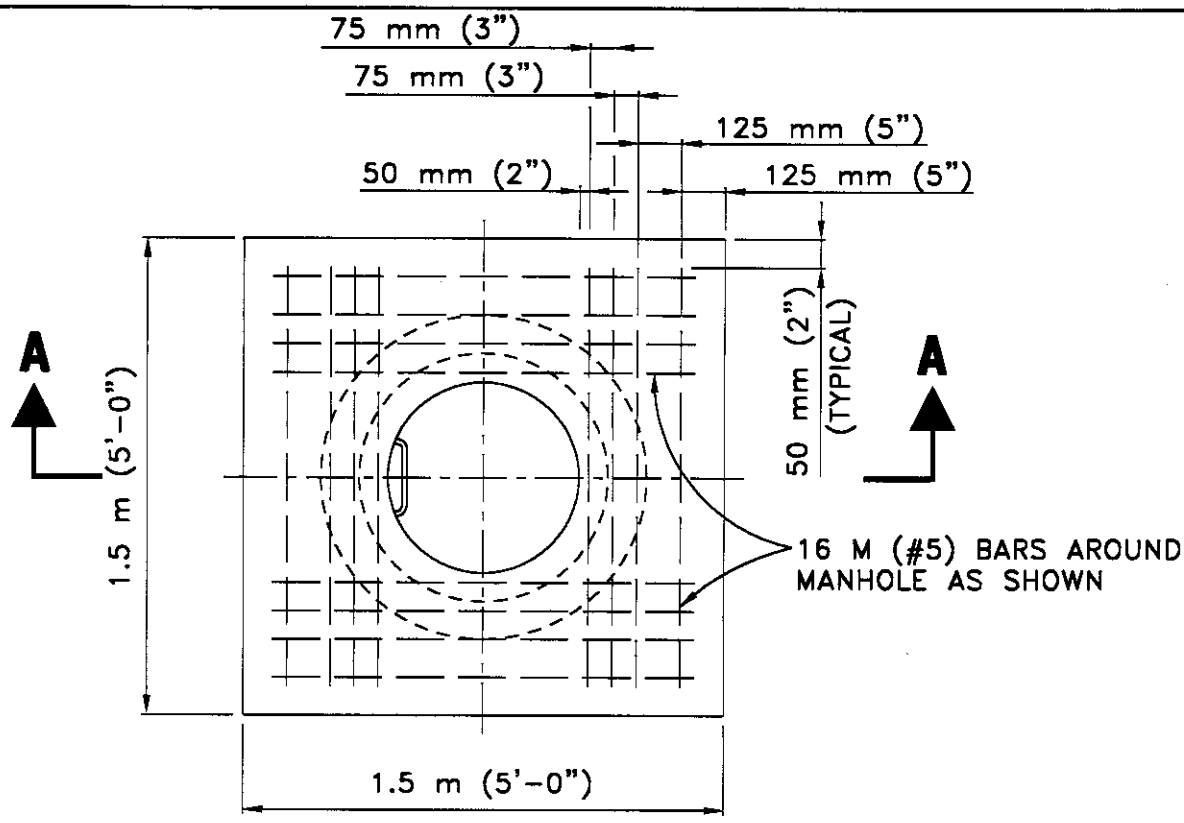

PLAN

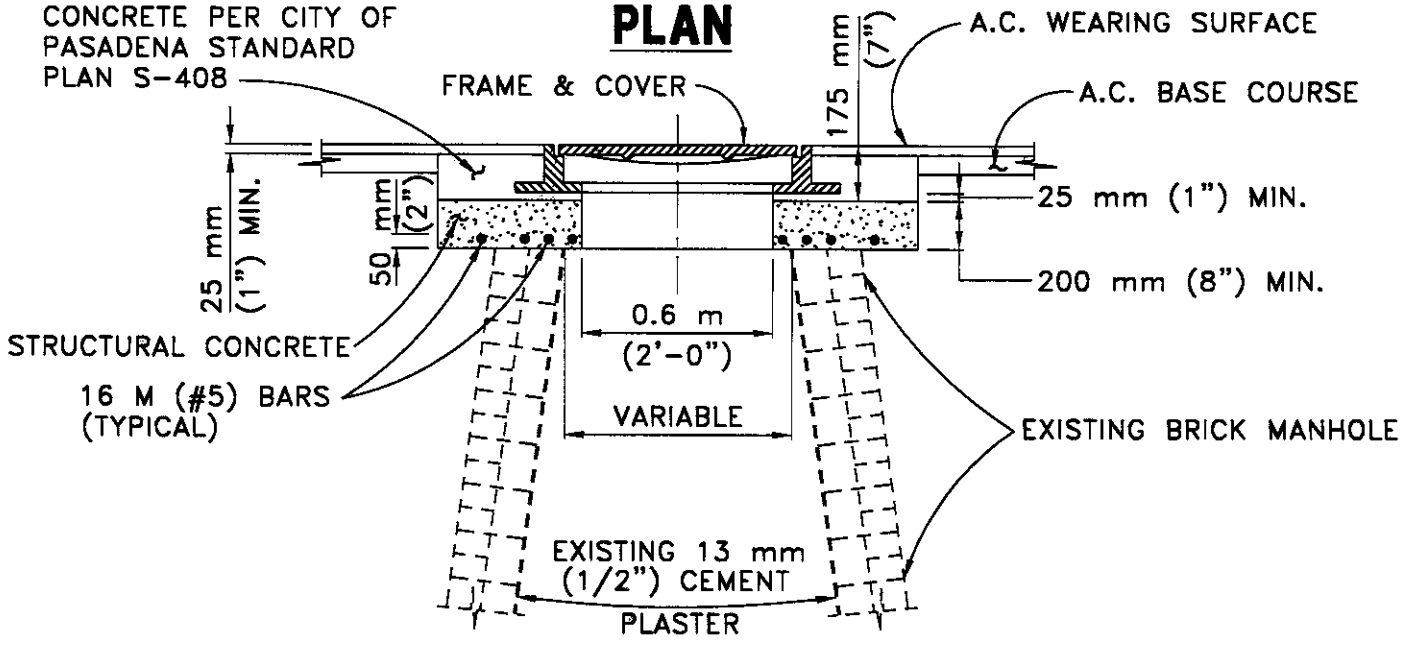

SECTION A-A

NOTE:

1. THIS STANDARD IS TO BE USED WHEN MANHOLE INSIDE DIAMETER EXCEEDS 0.725 m (2'-4") UNDER FRAME.
2. REMOVE EXIST. RAILS, RUBBLE, AND FRAME & COVER. CONSTRUCT 200 mm (8") MIN. THICKNESS TOP DECK & REINFORCE AS SHOWN. REUSE FRAME & COVER (AS DIRECTED).

CITY OF PASADENA - PUBLIC WORKS & TRANSPORTATION DEPARTMENT

DRAWN BY: DAVID PHAN	**MANHOLE TOP RECONSTRUCTION**	REVISION: ONE / UNITS: DUAL
CHECKED BY: JAMES LLOYD		STANDARD PLAN: **S-384**
SUBMITTED BY JAMES VALENTINE	APPROVED BY: CITY ENGINEER RCE NO. 38689 EXPIRES MARCH 31, 2001 — DATE 2-28-2001	SHEET 1 OF 1

S384-1-1.DWG MARCH 2001